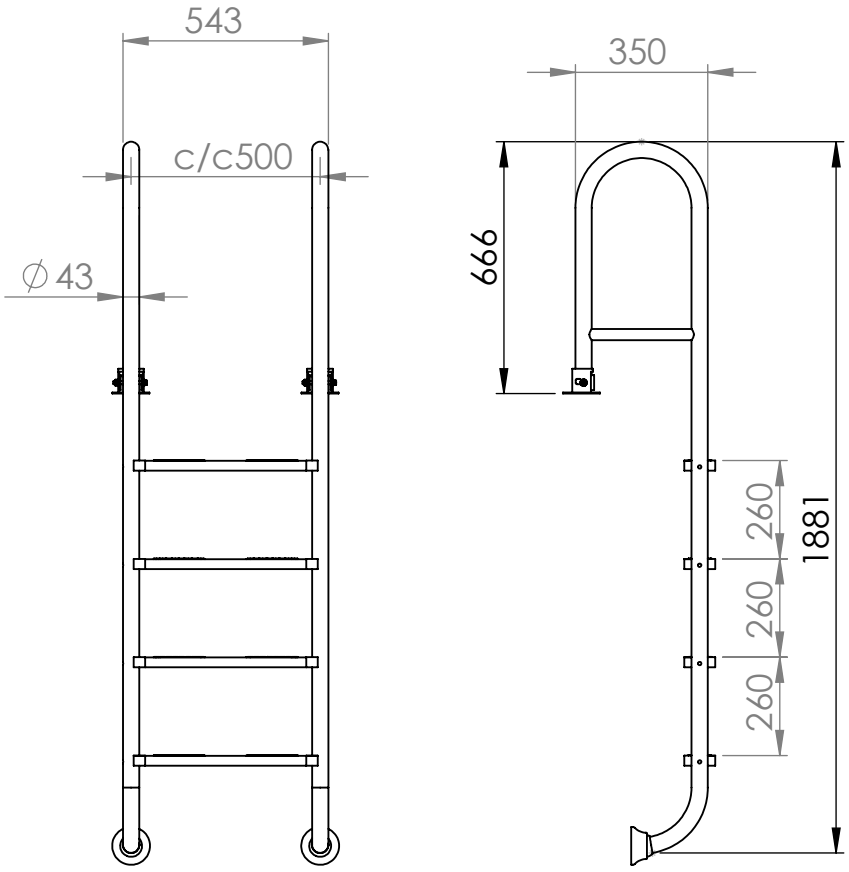

2300104

Folkpool.